AirLink Raven XT

User Guide

SIERRA WIRELESS

20070914
Rev 2.0

Important Notice

Due to the nature of wireless communications, transmission and reception of data can never be guaranteed. Data may be delayed, corrupted (i.e., have errors) or be totally lost. Although significant delays or losses of data are rare when wireless devices such as the Sierra Wireless AirLink Raven XT are used in a normal manner with a well-constructed network, the Sierra Wireless AirLink Raven XT should not be used in situations where failure to transmit or receive data could result in damage of any kind to the user or any other party, including but not limited to personal injury, death, or loss of property. Sierra Wireless accepts no responsibility for damages of any kind resulting from delays or errors in data transmitted or received using the Sierra Wireless AirLink Raven XT, or for failure of the Sierra Wireless AirLink Raven XT to transmit or receive such data.

Safety and Hazards

Do not operate the Sierra Wireless AirLink Raven XT in areas where blasting is in progress, where explosive atmospheres may be present, near medical equipment, near life support equipment, or any equipment which may be susceptible to any form of radio interference. In such areas, the Sierra Wireless AirLink Raven XT **MUST BE POWERED OFF**. The Sierra Wireless AirLink Raven XT can transmit signals that could interfere with this equipment.

Do not operate the Sierra Wireless AirLink Raven XT in any aircraft, whether the aircraft is on the ground or in flight. In aircraft, the Sierra Wireless AirLink Raven XT **MUST BE POWERED OFF**. When operating, the Sierra Wireless AirLink Raven XT can transmit signals that could interfere with various onboard systems.

Note: Some airlines may permit the use of cellular phones while the aircraft is on the ground and the door is open. Sierra Wireless AirLink Raven XT may be used at this time.

The driver or operator of any vehicle should not operate the Sierra Wireless AirLink Raven XT while in control of a vehicle. Doing so will detract from the driver or operator's control and operation of that vehicle. In some states and provinces, operating such communications devices while in control of a vehicle is an offence.

Limitation of Liability

The information in this manual is subject to change without notice and does not represent a commitment on the part of Sierra Wireless. SIERRA WIRELESS AND ITS AFFILIATES SPECIFICALLY DISCLAIM LIABILITY FOR ANY AND ALL DIRECT, INDIRECT, SPECIAL, GENERAL, INCIDENTAL, CONSEQUENTIAL, PUNITIVE OR EXEMPLARY DAMAGES INCLUDING, BUT NOT LIMITED TO, LOSS OF PROFITS OR REVENUE OR ANTICIPATED PROFITS OR REVENUE ARISING OUT OF THE USE OR INABILITY TO USE ANY SIERRA WIRELESS PRODUCT, EVEN IF SIERRA WIRELESS AND/OR ITS AFFILIATES HAS BEEN ADVISED OF THE POSSIBILITY OF SUCH DAMAGES OR THEY ARE FORESEEABLE OR FOR CLAIMS BY ANY THIRD PARTY.

Notwithstanding the foregoing, in no event shall Sierra Wireless and/or its affiliates aggregate liability arising under or in connection with the Sierra Wireless product, regardless of the number of events, occurrences, or claims giving rise to liability, be in excess of the price paid by the purchaser for the Sierra Wireless product.

Patents

Portions of this product may be covered by some or all of the following US patents:

5,515,013	5,629,960	5,845,216	5,847,553	5,878,2345,890,0575,929,8156,169,884
6,191,741	6,199,168	6,339,405	6,359,591	6,400,3366,516,2046,561,8516,643,501
6,653,979	6,697,030	6,785,830	6,845,249	6,847,8306,876,6976,879,5856,886,049
6,968,171	6,985,757	7,023,878	7,053,843	7,106,5697,145,2677,200,512D442,170
D459,303				

and other patents pending.

This product includes technology licensed from: QUALCOMM® 3G

Licensed by QUALCOMM Incorporated under one or more of the following United States patents and/or their counterparts in other nations:

4,901,307	5,056,109	5,101,501	5,109,390	5,228,0545,267,2615,267,2625,337,338
5,414,796	5,416,797	5,490,165	5,504,773	5,506,8655,511,0735,535,2395,544,196
5,568,483	5,600,754	5,657,420	5,659,569	5,710,7845,778,338

Manufactured or sold by Sierra Wireless or its licensees under one or more patents licensed from InterDigital Group.

Copyright

© 2010 Sierra Wireless. All rights reserved.

Trademarks

AirCard® and “Heart of the Wireless Machine®” are registered trademarks of Sierra Wireless. Watcher® is a trademark of Sierra Wireless, registered in the European Community. AirLink™ and AceWare™ are trademarks of Sierra Wireless.
Sierra Wireless, the Sierra Wireless logo, the red wave design, and the red-tipped antenna are trademarks of Sierra Wireless.

Windows® is a registered trademark of Microsoft Corporation.

QUALCOMM® is a registered trademark of QUALCOMM Incorporated. Used under license.

Other trademarks are the property of the respective owners.

Contact Information

Support Desk:	Phone:	1-877-231-1144
	Hours:	5:00 AM to 5:00 PM Pacific Time, Monday to Friday, except US Holidays
	E-mail:	support@sierrawireless.com
Sales Desk:	Phone:	1-510-624-4200 1-604-232-1488
	Hours:	8:00 AM to 5:00 PM Pacific Time
	E-mail:	MobileandM2Msales@sierrawireless.com

Post:	Sierra Wireless America 39677 Eureka Drive Newark, CA USA 94560 Sierra Wireless 13811 Wireless Way Richmond, BC Canada V6V 3A4
Fax:	1-510-624-4299 1-604-231-1109
Web:	www.sierrawireless.com

Consult our website for up-to-date product descriptions, documentation, application notes, firmware upgrades, troubleshooting tips, and press releases:

www.sierrawireless.com

Revision History

Revision number	Release date	Changes
1.x	Q2: 2009	Guide updated with ALEOS Release 4.0 content.
2.x	Q1: 2010	User Guide rebranded to current corporate standards.

Contents

Introduction to the Raven XT 1
ACEmanager 2
Simplified Deployment. 3
Monitor and Control. 3
ACEview 3
Modem Doctor 4
Connecting to your cellular provider. 4
Steps of a connection:. 4
Dynamic vs. Static IP Addresses 5
EV-DO 6
Security 6
Connection methods 6
USB 6
Virtual serial port 7
Networking 7
IPSec 7
GRE 8
Applications 8
Events Reporting 8
Software 8
Documentation 9
Tools and Reference Documents 9

Specifications 11
Features and Benefits 11
Technology 11
Bands 11
Environmental 11
Power Consumption: (@12V DC) 11
Standards/Approvals 12
Host Interfaces 12
Dimensions 12
Application Interfaces 12
LED Indicators. 12

Interface Port Pin-Outs 13
Serial Port 13
Power Connector 13

Activating your Raven XT on your cellular provider 15
Activating Using AT Commands 15
Using Direct Commands to the Internal Hardware 16
Activating the Modem 16

Hardware Installation of the Raven XT 17
Connecting to a Computer or other Device 19
Indicator Lights 19
Light Patterns 20
Mounting 21

Inputs, Relay Outputs, and Power Status 25
Capturing External Events using Inputs 25
Digital Input 25
Connecting devices to the IO Port 26
Monitoring the Input and Output 27

Regulatory Information 29
Federal Communications Commission Notice (FCC United States) 29
Industry Canada 29
Antenna Considerations 30
RF Exposure 30
EU 30
WEEE Notice 31

1: Introduction to the Raven XT

1

- Connecting to your cellular provider
- EV-DO
- Connection methods
- Networking
- Applications
- Software
- Documentation

Powered by ALEOS™, Raven XT modems are designed to maintain a reliable, consistent network connection. With a serial interface and a vast library of machine protocols, the Raven XT is a workhorse for industrial and mission critical applications. Class I Divison 2 certified as nonincendive equipment, the Raven Series is ideally suited for use in hazardous environments.

Key applications include utilities, manufacturing, automation, oil and gas, SCADA, telemetry, Homeland Security and asset monitoring.

Figure 1-1: Sierra Wireless AirLink Raven XT

ALEOS, the embedded core technology of the Sierra Wireless AirLink products simplifies installation, operation and maintenance of any solution, and provides an always-on, always-aware intelligent connection for mission-critical applications. ALEOS enables:

- Persistent Network Connectivity
- Over-The-Air (OTA) Upgrades
- Wireless Optimized TCP/IP
- Real-Time Notification
- Extensive Machine Protocols
- Packet Level Diagnostics

- Device Management & Control
- Protocol Spoofing

Figure 1-2: Powered by ALEOS

A wireless solution is not complete until you have software tools to manage the devices monitoring your valuable equipment. Using the AirLink Control Environment (ACE), ACEWare is the device management and monitoring application suite for Sierra Wireless AirLink devices powered by ALEOS.

Figure 1-3: ACEware Logo

The ACEware suite encompasses an application internal to the firmware (ACEmanager), Windows-based applications (ACEview and Modem Doctor), and a web-hosted application (ACEnet). You can download the applications and their user guides from the Sierra Wireless AirLink Solutions web site: http://www.sierrawireless.com/support. Contact your dealer or Sierra Wireless representative for any further information.

Note: ACEview requires the Microsoft .NET Framework v. 2.0 and Microsoft Windows 98, Windows 2000, Windows XP, or later. You can obtain the Microsoft .NET Framework from Microsoft at: http://www.microsoft.com/.

ACEmanager

ACEmanager, the AceWare remote configuration and monitoring tool, simplifies deployment and provides extensive monitoring, control and management capabilities. ACEmanager gives you the power to monitor and control your Sierra Wireless AirLink communications platforms in real-time.

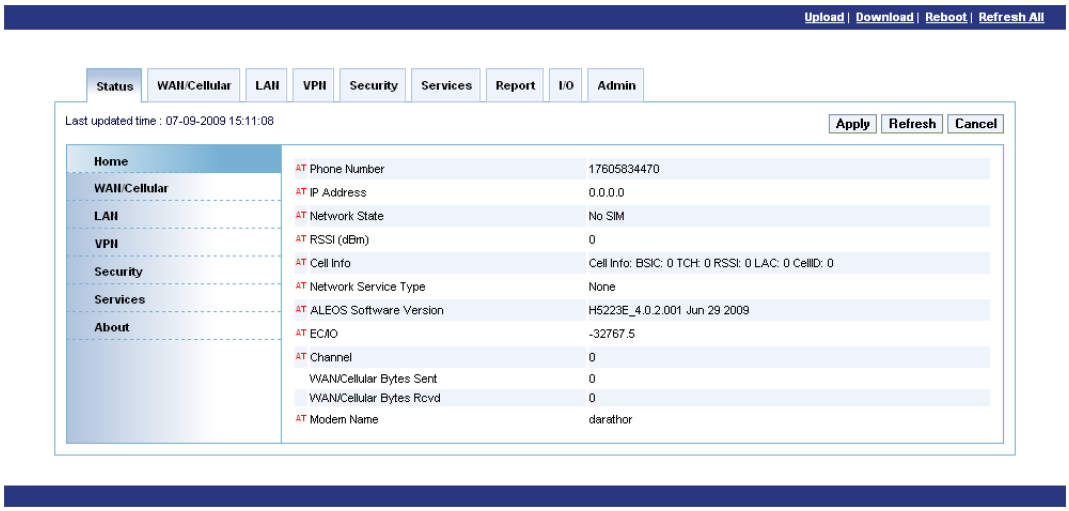

Figure 1-4: ACEmanager

Simplified Deployment

ACEmanager provides the ability to remotely set up and configure your Sierra Wireless AirLink products. Remote device setup and configuration reduces the deployment timeline of your wireless solution and provides a quicker path to ROI.

Templates allow you to easily configure devices in your fleet with identical settings, ensuring a simple, accurate deployment.

Monitor and Control

ACEmanager allows an administrator to remotely monitor a modem's status, health and configuration settings. The user interface displays signal strength, cell site information, byte counters and error conditions, enabling you to pinpoint any issues and troubleshoot immediately.

ACEmanager enables remote configuration and parameter settings to be changed or reset instantly over the air, change a device's port configuration, IP address settings, GPS settings, and much more. After configuring one modem, use the template feature to copy that device configuration to other devices.

Tip: *Configuration steps and examples in this guide use ACEmanager.*

ACEview

ACEview is an efficient status and connection monitoring application with a low-profile, easy to read interface. In ACEview, you can also update PRL.

Figure 1-5: ACEview

Modem Doctor

Modem Doctor and Modem Doctor USB is a troubleshooting and diagnostics utility. This utility will allow you to get a log file of the Raven XT activity which you can then send to Sierra Wireless support or erase the current configuration completely.

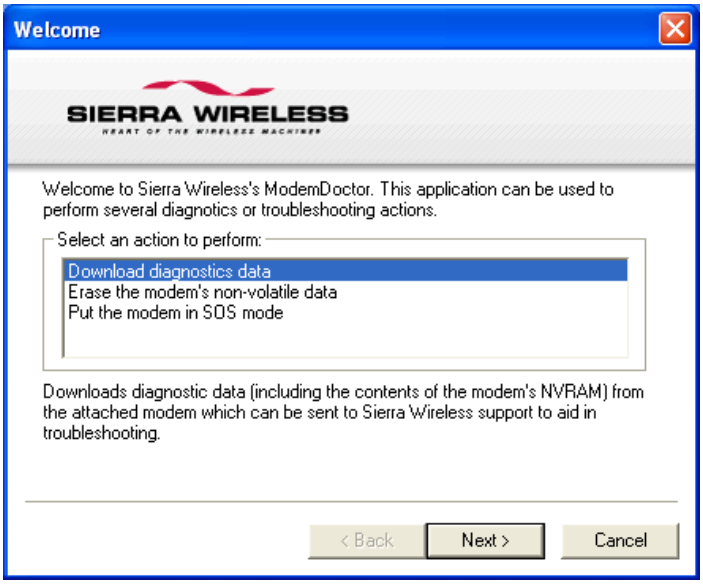

Figure 1-6: Modem Doctor

Connecting to your cellular provider

The Raven XT uses your cellular provider as an ISP (Internet Service Provider) to connect you to the Internet.

Steps of a connection:

1. When your Raven XT is powered on, it automatically searches for cellular service using CDMA-based cellular technology.
2. Your Raven XT establishes a PPP (Point to Point Protocol or “dial” up connection) link to your cellular provider network, also called registering on the network, and receives an IP address.

3. When your Raven XT has received its IP address from your cellular provider, a connection to the Internet or the cellular network is also available for computers or other devices connected directly to the Raven XT.

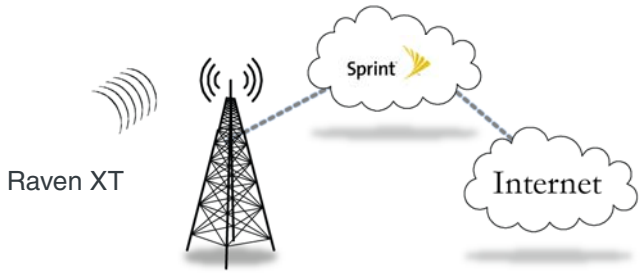

The Raven XT will perform routing for all internet traffic to and from the computers or other end devicse.

With the Raven XT in Ethernet Public mode, only one device connected to the Ethernet port will receive the public IP address which is the one provided by the cellular network. In Ethernet Private mode, with a hub or switch connected to the Ethernet port, the Raven XT will provide NAT for a range of computers or other devices connected to the switch or hub and Internet access to all of them.

Dynamic vs. Static IP Addresses

There are two types of addresses on networks: dynamic and static.

- Dynamic addresses are assigned on a “need to have” basis. Your Raven XT might not always receive the same address each time it connects with your cellular provider.
- Static addresses are permanently assigned to a particular account and will always be used whenever your Raven XT connects to the Internet. The IP address will not be given to anyone else.

Most ISPs (cellular included) use dynamic IP addresses rather than static IP addresses since it allows them to reuse a smaller number of IP addresses for a large number of customers. A dynamic IP address is suitable for many common Internet uses, such as web browsing, looking up data on another computer system, or other client functions (such as data only being sent out or only being received after an initial request).

Tip: *If your account with your cellular provider includes a dynamic IP address and you need a static IP, please consult your your cellular provider Representative for more information about changing your account for static IP support.*

If you need to contact your Raven XT, a device connected to the Raven XT, or a host system using the Raven XT from the Internet, you need to have a known IP (such as one which is static) or domain name (an IP address which is converted by a DNS server into a word based name). If you have a dynamic IP address for your modem, you can use a Dynamic DNS service (such as IP Manager) to translate your IP address into to a domain name.

Caution: *If you want to connect remotely to your Raven XT using TCP/IP, the IP address given to your modem by your cellular provider cannot be a private or internal IP address (such as a special private network) unless you are on the same network or inside that network's firewall (such as with frame relay).*

EV-DO

CDMA (Code Division Multiple Access) is the underlying digital radio network technology used by many cellular providers across the globe and is prevalent in North America. To provide backward compatibility and seamless connections in a wider range of locations, Sierra Wireless EV-DO products your Raven XT will fall back to 1x when EV-DO is not available.

Sierra Wireless is certified with your cellular provider, a prominent North American 1x and EV-DO carrier.

EV-DO revision A is an enhancement on the original revision 0 adding expanded upload capabilities and a more robust connection overall. In addition to increasing the downlink speed, revision A also increases the uplink speed. In addition, it is backwards compatible and automatically connects with existing and broadly deployed EV-DO Rev. 0 and 1x networks ensuring reliable and pervasive connectivity.

Security

1x data transmissions are highly secure. Originally developed based upon the "spread spectrum" pioneered by the US Department of Defense, security in CDMA technologies is obtained by spreading the digital information contained in a particular signal of interest over multiple coded paths, over a much greater bandwidth than the original signal.

Connection methods

You can connect the Raven XT to a USB or a Ethernet (RJ45) on a computer. When connected to a USB or Ethernet port, the Raven XT behaves like a network card.

USB

The Raven XT is equipped with a USB port which increases the methods by which you can send and receive data. The USB port can be set to work as either a virtual Ethernet port or a virtual serial port. A driver installation is required to use the USB port in either mode.

It is recommended that you use a USB 2.0 cable with your Raven XT and connect directly to your computer for best throughput.

Virtual serial port

The Raven XT supports one virtual serial port over USB. This VSP can be used, for example, to send AT commands, or to run many serial based applications such as HyperTerminal®.

Networking

IPSec

The IP protocol that drives the Internet is inherently insecure. Internet Protocol Security (IPSec), which is a standards-based protocol, secures communications of IP packets over public networks.

IPSec is a common network layer security control and is used to create a virtual private network (VPN).

The advantages of the IPSec feature includes:

- Data Protection: Data Content Confidentiality allows users to protect their data from any unauthorized view, because the data is encrypted (encryption algorithms are used).
- Access Control: Access Control implies a security service that prevents unauthorized use of a Security Gateway, a network behind a gateway or bandwidth on that network.
- Data Origin Authentication: Data Origin Authentication verifies the actual sender, thus eliminating the possibility of forging the actual sender's identification by a third-party.
- Data Integrity: Data Integrity Authentication allows both ends of the communication channel to confirm that the original data sent has been received as transmitted, without being tampered with in transit. This is achieved by using authentication algorithms and their outputs.

The IPSec architecture model includes the Sierra Wireless AirLink gateway as a remote gateway at one end communicating, through a VPN tunnel, with a VPN gateway at the other end. The remote gateway is connected to a Remote network and the VPN is connected to the Local network. The communication of data is secure through the IPSec protocols.

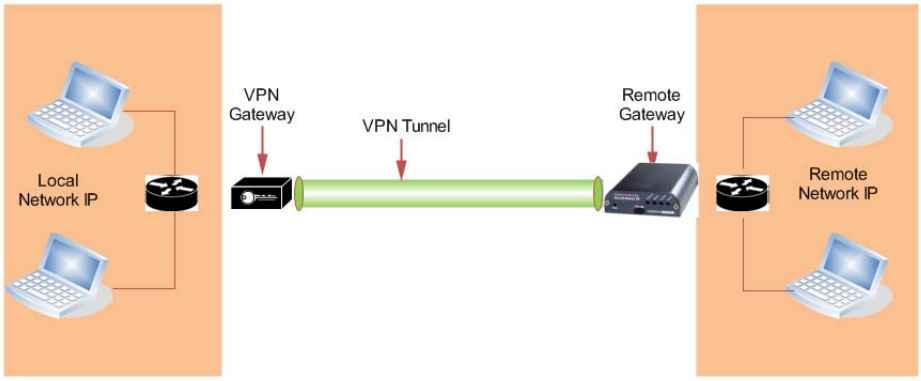

Figure 1-7: IPSec Architecture

GRE

GRE (Generic Routing Encapsulation) tunnel is used to carry non-IP packets through an IP Network. Non -IP packets, that are send over the GRE tunnel, need to be first encapsulated. Hence, ALEOS is used to configure and encapsulate non-IP packets and transmit over IP through the GRE tunnel.

Applications

Events Reporting

Events Reporting is Sierra Wireless AirLink's modem's new software feature provided via ACEmanager, that allows the users to generate reports from the events that take place. Event Reporting Protocol is an intuitive embedded protocol, which automatically formats the messages based on an event trigger. The messages generated are then reported to the remote server.

Software

The Raven XT modem comes with the following software:

- AceView, the software for the Raven XT which allows you to monitor your connections.
- The driver that forms the interface between the Raven XT and your Windows operating system when using USB virtual Ethernet or USB virtual serial.
- The firmware that is stored in non-volatile memory and includes ACEmanager.

  The Raven XT has an embedded radio module, also made by Sierra Wireless, Inc. There are two firmware programs on the device—one stored on the controller board of the Raven XT and one on the radio module.

  The firmware was loaded into the radio module and controller board when the Raven XT was assembled. As new versions of the software and firmware are released, they are posted at www.sierrawireless.com.

Documentation

This *Raven XT User Guide* describes how to:

- Install the Raven XT hardware.
- Connect the radio antennas.
- Connect a notebook computer and other input/output (I/O) devices.
- Interpret the LEDs on the Raven XT and the indicators in the AceView software.

This *User Guide* is provided as a PDF (Portable Document Format) file on the installation CD or from the Sierra Wireless support website.

Tools and Reference Documents

User Guide	Description
ALEOS User Guide	This document discusses software configuration in ACEmanager and explains all the ALEOS features.
ACEview User Guide	This document explains the use of this utility tools which is used to view and monitor the connection state of a Sierra Wireless AirLink device.
ACEnet User Guide	This document explains the use of ACEnet services for remote management of Sierra Wireless AirLink device.

2: Specifications

- Interface Port Pin-Outs
- Power Connector

Features and Benefits

- Embedded Intelligence
- Low Power Consumption
- High-Speed Processor
- High-Speed 2-way Data
- Serial and USB Port
- Machine Protocols
- Simple Integration with Legacy Equipment
- Persistent Network Connectivity
- Remote Management and Configuration
- Suitable for use in Class I, Division 2, Groups A, B, C, D or unclassified or non-haardous locations

Technology

- CDMA EV-DO Revision A
  With Fallback to:
  - CDMA 1x EV-DO (Revision 0)
  - CDMA 1xRTT
  - CDMA IS-95

Bands

- 800 Mhz Cellular
- 1900 Mhz PCS

Environmental

- Operating Temperature:
  - -30° to 70° Celsius
- ° Storage Temperature:
  - -40° to 85° Celsius

Power Consumption: (@12V DC)

- Transmit/Receive (Typical/Max) 350/450 mA
- Idle 104 mA
- Input Current 40 mA to 120 mA
- Input Voltage 9 - 28V DC

Standards/Approvals

- Carrier specific approvals
- FCC
- Industry Canada

Note: The device fulfills only class A limits.

Note: In consideration of EU regulations, this device is classified as Class A device for use in commercial environments.

Host Interfaces

- USB2.0 Full Speed (Mini-B5)
- Antenna Connection:
  - Cellular - 50 Ohm SMA

Warning: *The antenna should be installed no closer than 20 cm from the human body. It is one of the RSS-102 requirements for devices not requiring SAR.*

Dimensions

- 76mm x 27mm x 100mm
- 160 grams

Application Interfaces

- TCP/IP, UDP/IP, DHCP, HTTP, SNMP, SMTP, SMS, MSCI, Binary, Modbus, and more

LED Indicators

- Network
- Signal
- Activity
- Power

Interface Port Pin-Outs

Serial Port

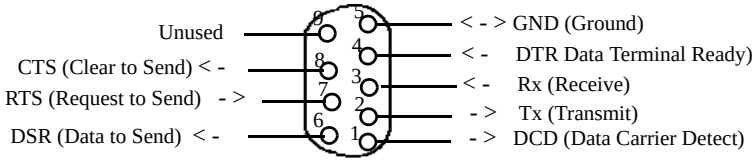

Figure 2-1: Serial Port Diagram: Female DB-9 DCE (not to scale)

Power Connector

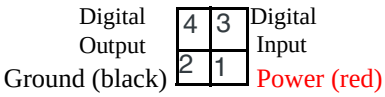

Figure 2-2: Power Connector (not to scale)

Warning: *Explosion Hazard - Do not disconnect equipment unless power has been switched off or the area is known to be non-hazardous.*

3: Activating your Raven XT on your cellular provider

3

- Activating Using AT Commands

This chapter provides step-by-step directions for activating your Raven XT on your cellular provider's network.

Tip: *If you want to use USB to activate the Raven XT, you will need to install the USB driver first. Please refer to,Installing the USB driver, in Chapter 6.*

Activating Using AT Commands

An alternate method to configure and activate your Raven XT is by using AT commands sent directly to the modem with a terminal application.

Caution: *It is not possible to activate the Raven XT using either ACEmanager or AceNet.*

1. Set telnet timeout in to 20 minutes.
2. Save the telnet setting.
3. Enter the user name of your account (NAI). The user name is usually expressed as an email address with phone number of the account (example, 1234567@carrier.com). This information should be provided by your carrier. You may not need this step.

   AT*NETUID=[NAI]
4. Enter the password of your account. This information should be provided by your carrier. You may not need this step.

   AT*NETPW=[password]
5. Verify ALEOS has established communication to the internal hardware.
6. Enter the activation command appropriate for your type of account. The SID and NID are optional and only required if your account type uses them.
   - If you have the same number for the MIN and MDN or MSID:

     AT*PROVISION=MSL,MDN[,SID,NID]
   - If you have the different numbers for the MIN and MDN or MSID:

     AT*PROVISION2=MSL,MDN,MIN/MSID[,SID,NID]

Using Direct Commands to the Internal Hardware

Use only if the ALEOS method is unsuccessful.

Activating the Modem

1. Put modem into passthru mode to by-pass ALEOS. This will allow direct communication with the wireless module for programming. Entering passthru will take 10-15 seconds and will return an 'OK' when it is complete.

   AT\APASSTHRU

2. Verify you are in Passthru mode.

   AT!STATUS

3. Unlock the module.

   AT~NAMLCK=MSL

4. Set the MDN and MSID.

   AT~NAMVAL=0,MDN,MSID,0,65535

5. Verify the settings are what you intended to enter.

   AT~NAMVAL?0

6. Reset the module.

   AT!RESET

7. Press the reset button on the front of the modem. When the modem restarts, it should register on the network.

4: Hardware Installation of the Raven XT

4

- Connecting to Power
- Connecting to a Computer or other Device
- Indicator Lights
- Mounting

Note: During installation, please be sure that the cables are secure but do not bear any additional weight that could loosen the connector from the unit.

Your Raven XT should be mounted in a position that allows easy access for the cables so they are not bent, constricted, in close proximity to high amperage, or exposed to extreme temperatures. The LEDs on the front panel should be visible for ease of operational verification. You should ensure that there is adequate airflow around the modem but that it is kept free from direct exposure to the elements, such as sun, rain, dust, etc.

Caution: *The Raven XT is in a hardened case and designed for use in industrial and extreme environments. However, unless you are using cables expressly designed for such environments, they can fail if exposed to the same conditions the Raven XT can withstand.*

Figure 4-1: Raven XT Connectors

Note: This device is not intended for use within close proximity of the human body. Antenna installation should provide for at least a 20 CM separation from the operator.

Antennas selected should not exceed a maximum gain of 5 dBi under standard installation configuration. In more complex installations (such as those requiring long lengths of cable and/or multiple connections), it's imperative that the installer follow maximum dBi gain guidelines in accordance with the radio communications regulations of the Federal Communications Commission (FCC), Industry Canada, or your country's regulatory body (if used outside the US).

Your Raven XT will work with most cellular antennas with a SMA connector. Connect the primary antenna or primary RF cable directly to the antenna connector on the back of the Raven XT.

Tip: *When using a cable to an antenna placed away from the modem, minimize the length of your cable. All gain from a more advantageous antenna placement can be lost with a long cable to the modem.*

Note: Your Raven XT does not have a second antenna for received diversity. Received diversity is disabled by default.

Connecting to Power

This I/O port handles external input and output events. An external device can send digital input to the modem, through the digital I/O port.

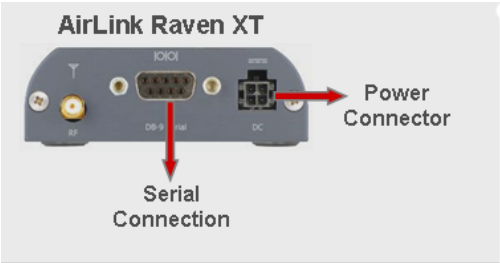

Figure 4-2: Digital 1/0 Port: Power Connector

Warning: ***Risk of electric shock:*** *Only use the supply voltages listed in this user guide.*

Warning: *When using AC to DC adapter the ambient temperature should not exceed 40 ^{0}C.*

Your Raven XT can be used with either DC or AC, with the appropriate power adapter. DC cables and AC adapters are available as optional accessories in addition to the one included with your Raven XT.

Note: When using a DC power source (such as a solar cell), Sierra Wireless recommends placing a fuse (1-2 Amp) on the line close to the power source to protect your power source from possible surges due to shorts or other line issues.

The DC power cable positive lead should be connected to the battery or power source positive terminal. The power cable negative lead should be connected to the battery or power source negative terminal.

Tip: *The DC power cable has a white wire lead in addition to the power positive and negative. This is for a feature not present in the Raven line modems. In the Raven XT, the white wire lead has no function and can be ignored.*

Warning: *Explosion Hazard - Do not disconnect equipment unless power has been switched off or the area is known to be non-hazardous.*

Connecting to a Computer or other Device

Figure 4-3: USB

Your Raven XT's full-speed (12 Mbit) USB 2.0 port can be connected directly to most computers or other devices using a standard full-speed USB 2.0 cable. If the computer or device you are connecting or the cable is not rated for full-speed, the modem will communicate at a reduced speed to match. The Raven XT functions as a device, not a host.

When it is connected to a computer, the USB port should be seen as a COM port or Ethernet port after the applicable driver is installed.

The Raven XT has a standard mini-B connector.

Warning: *The USB port can only be used in a non-hazardous environment.*

Indicator Lights

When solid, Raven XT indicates a successful connection. When your Raven XT is connected to power and an antenna, there is a specific pattern to the lights to indicate its operation mode.

Figure 4-4: Raven XT Indicator lights

- **Network** - Indicates a successful connection to the cellular network with an IP address given and a channel acquired.
- **Signal** - Light shows the strength of the signal and may be nearly solid (strong signal) or flashing (weaker signal). A slow flash indicates a very weak signal.

RSSI LED Ranges

RSSI/Signal LED Status	Ranges of RSSI (dBm)
On Solid	Equal to or stronger than -69
Fast Blink	-70 to -79
Normal blink	-80 to -89
Slow Blink	-90 to -99
Extinguished	Equal to or weaker than -100

- **Activity** - Lights will flash as data is transferred to and from the PinPoint modem on the remote network.
- **Power** - Indicates the power adapter is connected and there is power getting to the Raven XT.
- The **Reset button** (on the left side of the Raven XT) has two functions. If it is quickly depressed and released, the modem will simply power cycle the internal hardware. If, however, the reset is depressed and held for several seconds (count 10 slowly, and wait for the power light to go off after the light pattern stops), the ALEOS configuration settings will return to the factory defaults.

Caution: *If you reset the modem configuration using the reset button, you may need to reactivate your Raven XT with your cellular provider.*

Light Patterns

The LEDs on the front of the modem will respond in different patterns to indicate modem states.

- **Normal** - Each LED, mentioned above, is lit as applicable.
- **Start up** - The LEDs will cycle from left to right.
- **PassThru mode** - Network and Signal LEDs will blink in tandem. The Activity LED will blink when transmitting or receiving data.
- **SOS** - The Network LED blinks.
- **Configuration Reset** - The LEDs will cycle left to right and then right to left 4 times.
- **Authentication Failure** - The Network, Signal, and Activity LEDs blink every 2 seconds.
- **Data Retry** - The Network, Signal, and Activity LEDs blink every 3 seconds.

Mounting

An optional accessory for your Raven XT is a mounting kit, which includes a bracket. The bracket is designed to snugly cradle the modem and hold it in place where you need it. You can use a strap around the bracket and modem for extra security. The bracket can be attached to a stationary location using #6 screws with the mounting hole diameter approximately 0.150".

The instructions to bracket installation is following:

1. Mount the bracket using number 6 screws. There are two holes each, to fasten screws, and minimum of one hole each end is required for mounting bracket.
2. Position Raven XT between Alignment ears.
3. Engage top groove in body of Raven XT with two tabs.
4. Push on far side of Raven XT in center so that it touches side of Bracket.
5. Press down and release when upper groove on far side of Raven XT, aligns with tabs.
6. Release to complete installation in to mounting bracket.

To remove, press on the two edges of the modem and the brackets, as pointed by arrows in the diagram provided below. By doing this, the modem will snap out of the mounting bracket.

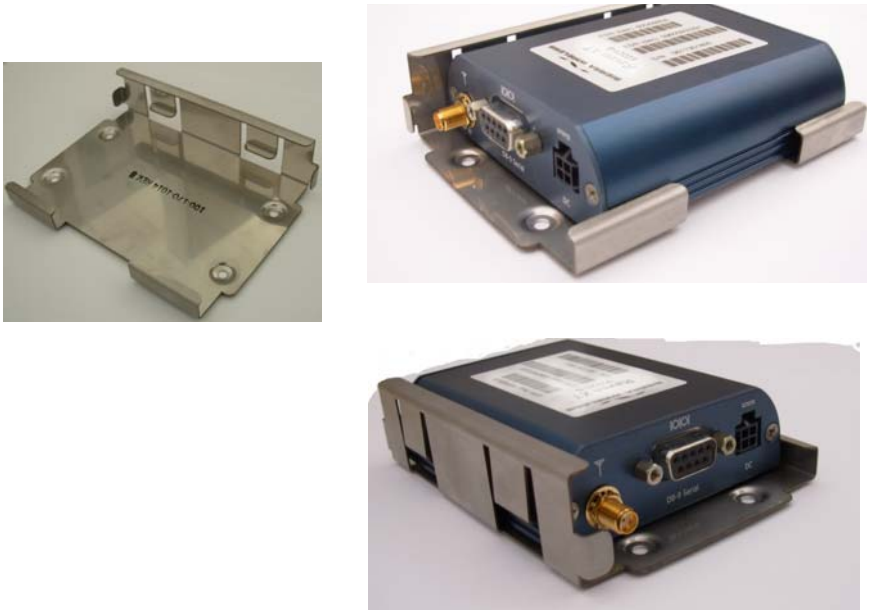

Figure 4-5: Optional Mounting Bracket

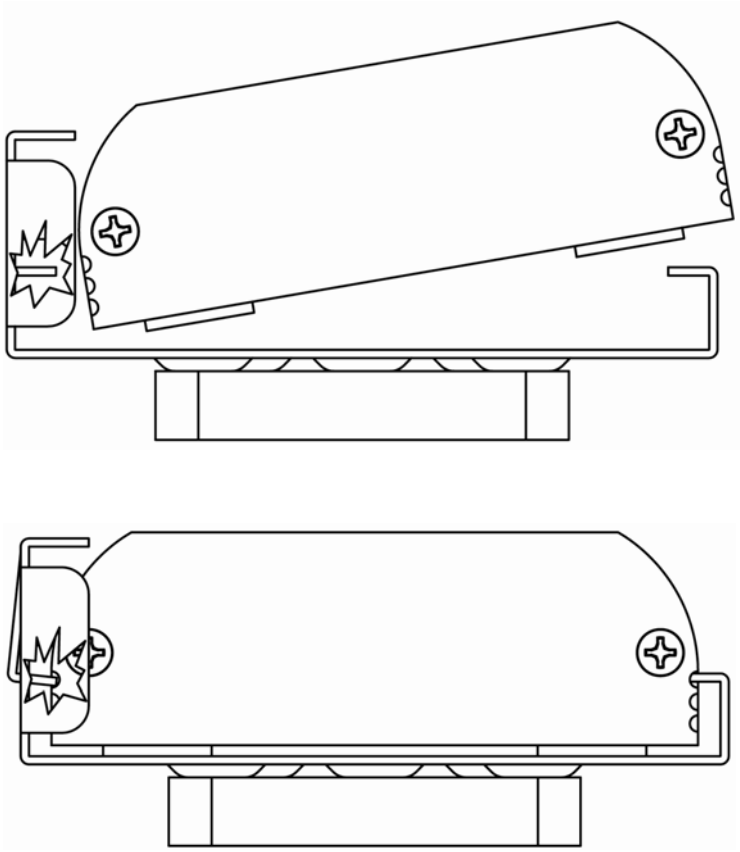

Figure 4-6: Mounting bracket installation

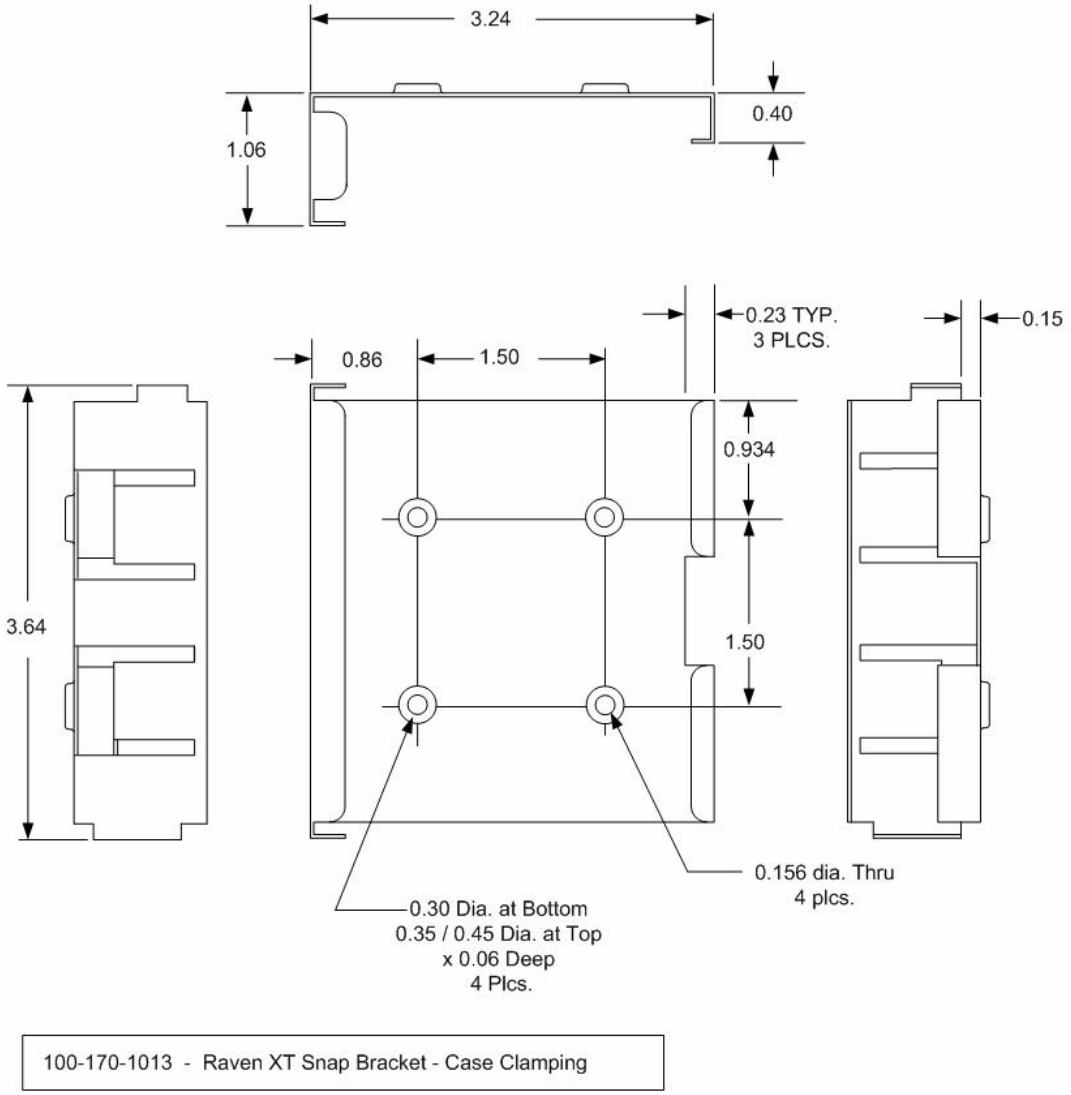

Figure 4-7: 100-170-1013 : Mounting Bracket for Raven XT

5: Inputs, Relay Outputs, and Power Status

5

- Capturing External Events using Inputs

The Raven XT has special features for use in an M2M environment. The Raven XT can be configured to monitor the input, respond to specific types of events, and even trigger a digital output. These features can be configured to your needs.

Capturing External Events using Inputs

While using a special power cable with I/O, the Raven XT is equipped with an I/O interface for use in instrumentation applications. This includes 1 digital input and 1 digital output which can be connected, to sensors and switches to monitor status and remotely control equipment.

Figure 5-1: Raven XT

Digital Input

By measuring contact closures on switches, the digital input(s) can report a simple open or closed state. Digital input(s) can be wired to the two ground signals via a switch. When the switch is open, the input will read “OPEN”. When the switch is closed and the input is connected to ground, the input will read “CLOSED”.

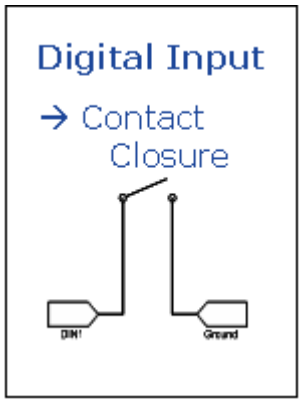

Figure 5-2: Digital Input Contact Closure

- When a door or other latch is opened or closed.
- Counting pulses or other electronic events.
- When a gauge reaches a certain point.
- When a container fills or empties.
- When a switch or valve is opened or closed.
- When the tow bar is raised or lowered.
- Connected to a sensor, the level of fuel in a vehicle.
- When the trunk of a vehicle is opened or closed.
- When the ignition is turned on or off.

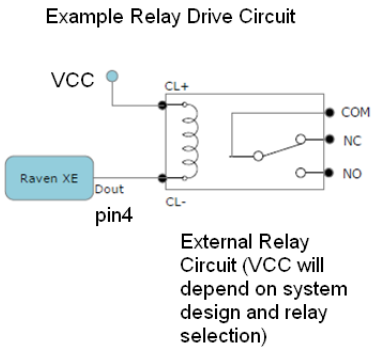

Figure 5-3: Digital Output

Connecting devices to the IO Port

Note: Before you install the Raven XT in its final location, be sure to cover all exposed wiring.

You can purchase an optional I/O Power Cable for the Raven XT which can be used to attach devices to the combination I/O port and power connector. The harness has pre-wired leads to allow you to customize your own connections. The wires are paired and color-coded.

Warning: ***Risk of electric shock:*** *Only use the supply voltages listed in this user guide.*

	Digital Input	Digital Input/Output
	Input Specs(Over temp)	
	Pin 3	Pin 4
Function	Input	Output Only
Max VDC	3.3V	3.3V
V Positive VDC	1.3 to 2.2VDC	1.3 to 2.2VDC
V negative VDC	0.6 to 1.2 VDC	0.6 TO 1.5VDC
Hysteresis VDC	0.4 to 1.2VDC	0.4 to 1.2VDC
Internal Pullup	52kohm to 3.3VDC	(no pull on pin 4)
	Output Specs (Over temp)	
Function	Input Only	Output
IOUT		±50mA
VOHmin (IOH - 16 mA)		2.4V
VOHmin (IOH - 24 mA)		2.3V
VOLmax(IOL 24mA)		0.55V

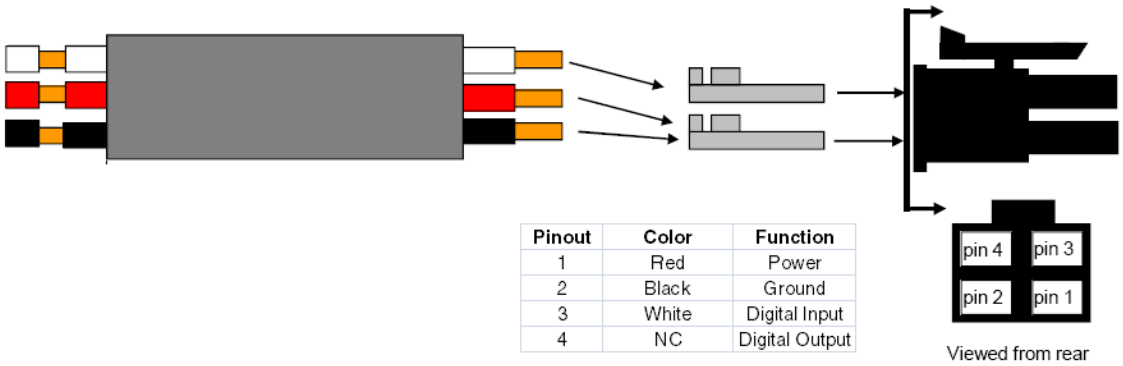

Figure 5-4: Power Connector Diagram

Caution: *Never apply voltage to the Digital inputs. The inputs can only be switched open or closed to ground.*

Monitoring the Input and Output

You can monitor the status of the digital inputs using ACEmanager, AT Commands, or with special reports sent by email, SMS, or other report types using Event Reporting. In ACEmanager, select the I/O group.

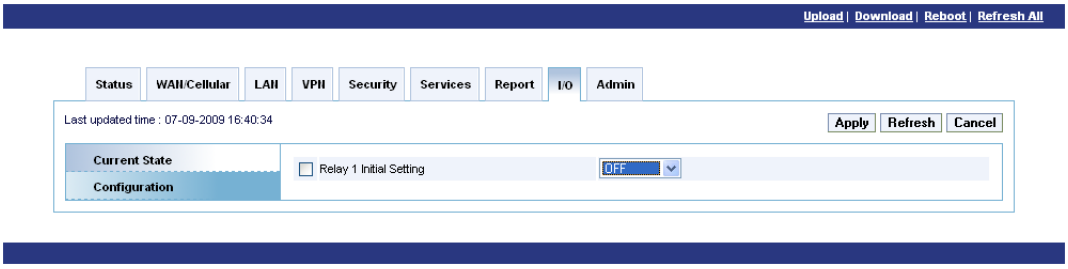

Figure 5-5: ACEmanager : I/O

6: Regulatory Information

Federal Communications Commission Notice (FCC United States)

Electronic devices, including computers and wireless modems, generate RF energy incidental to their intended function and are therefore subject to FCC rules and regulations.

This equipment has been tested to, and found to be within the acceptable limits for a Class A digital device, pursuant to part 15 of the FCC Rules.

This equipment generates radio frequency energy and is designed for use in accordance with the manufacturer's user manual. However, there is no guarantee that interference will not occur in any particular installation.

If this equipment causes harmful interference to radio or television reception, which can be determined by turning the equipment off and on, you are encouraged to try to correct the interference by one or more of the following measures:

- Reorient or relocate the receiving antenna
- Increase the separation between the equipment and the receiver
- Connect the equipment into an outlet on a circuit different from that to which the receiver is connected
- Consult the dealer or an experienced radio/television technician for help
- This device complies with Part 15 of the Federal Communications Commission (FCC) Rules. Operation is subject to the following two conditions:

1. This device may not cause harmful interference.
2. This device must accept any interference received, including interference that may cause undesired operation.

Warning: *Changes or modifications to this device not expressly approved by Sierra Wireless could void the user's authority to operate this equipment.*

Industry Canada

This Class A digital apparatus meets all requirements of the Canadian Interference Causing Equipment Regulations. Operation is subject to the following two conditions:

1. this device may not cause harmful interference, and
2. this device must accept any interference received, including interference that may cause undesired operation.

Cet appareillage numérique de la classe B répond à toutes les exigences de l'interférence canadienne causant des règlements d'équipement. L'opération est sujette aux deux conditions suivantes:

1. ce dispositif peut ne pas causer l'interférence nocive, et
2. ce dispositif doit accepter n'importe quelle interférence reçue, y compris l'interférence qui peut causer l'opération peu désirée.

Antenna Considerations

Although the antenna model(s) used with these devices meet(s) the Industry Canada Radio Frequency requirements, it is possible that the future customers may swap them for different ones without network provider's knowledge and approval. Such customers must be made aware of, and follow, the Radio Frequency requirements applied in this Technical Approval:

- RSS-102 "Radio Frequency Exposure Compliance of Radiocommunication Apparatus (All Frequency Bands)"
- RSS-129 "800 Mhz Dual-Mode CDMA Cellular Telephones"
- RSS-132e "Cellular Telephones Employing New Technologies Operating in the Bands 824-849 Mhz and 869-894 Mhz"
- RSS-133 r1 "2 GHz Personal Communications Services"

RF Exposure

In accordance with FCC/IC requirements of human exposure to radiofrequency fields, the radiating element shall be installed such that a minimum separation distance of 20cm should be maintained from the antenna and the user's body .

Warning: *This product is only to be installed by qualified personnel!*

To comply with FCC/IC regulations limiting both maximum RF output power and human exposure to RF radiation, the maximum antenna gain must not exceed 5 dBi in the Cellular band and 4 dBi in the PCS band.

EU

Sierra Wireless hereby declares that the Raven XT devices conform to all the essential requirements of Directive 1999/5/EC.

Products are marked with a CE and notified body number as shown here:

CE 0682

The Declaration of Conformity made under Directive 1999/5/EC is available for viewing at the following location in the EU community.

Sierra Wireless

39677 Eureka Drive

Newark, CA

USA 94560

The device is a Class A device for use in commercial environment.

WEEE Notice

If you purchased Raven XT in Europe, please return it to your dealer or supplier at the end of its life. WEEE products may be recognised by their wheeled bin label on the product label.

SIERRA
WIRELESS